WAIMAKARIRI
DISTRICT COUNCIL

215 High Street
Private Bag 1005
RANGIORA 8254
New Zealand

Phone: (03) 313 6136
or: (03) 327 6834
Fax: (03) 313 4432

Website: www.waimakariri.govt.nz

CONS

Form 5

Building consent 050626

Section 51, Building Act 2004

The building

Street address of building: 1 THE STABLES, WOODEND

Legal description of land where building is located: Lot 1 DP 82878

Valuation number: 2161305401

Building name:

Location of building within site/block number:

Level/unit number:

The owner

Name of owner: A P & L G CHAMBERLAIN

Contact person:

Mailing address: 1 THE STABLES, WOODEND 8255

Street address/registered office:

Phone number: Landline: 3127108 Mobile:

Daytime: After hours:

Facsimile number: 3127177

Email address:

Website:

First point of contact for communications with the council/building consent authority:
As above

Building work

The following building work is authorised by this building consent:

INSTALLATION MASPORT LE 3000 FREESTANDING

HEATING

This building consent is issued under section 51 of the Building Act 2004. This building consent does not relieve the owner of the building (or proposed building) of any duty or responsibility under any other Act relating to or affecting the building (or proposed building).

This building consent also does not permit the construction, alteration, demolition, or removal of the building (or proposed building) if that construction, alteration, demolition, or removal would be in breach of any other Act.

This building consent is issued subject to the following conditions:

1. This consent is issued subject to the attached Building Inspection Works Schedule:
2. Please note that the consent fees allow for a single inspection of construction stages of the project as specified in the inspection schedule. Any extra inspections required will be invoiced before a code compliance certificate is issued.
3. Please note that any deviation from the approved documents is subject to a new Building Consent.
4. Completion inspection required prior to issue of an interim or final Code Compliance Certificate. Please make application for inspection on the appropriate form.
5. Any special conditions of consent endorsed on the Building Consent and/or documents MUST be drawn to the attention of the subcontractors.
6. The duplicate copy of the approved consent documents and inspection schedule must remain on site during construction.
7. To comply with the endorsements in red on the plan.
8. All construction work and materials used shall comply with the New Zealand Building Code, not withstanding any inconsistencies which may occur in the drawings and specifications.
9. HEATING UNIT and FLUE to be installed in strict accordance with the manufacturers instructions. UNIT and HEARTH shall be restrained in accordance with the Building Code, clause B1 and AS/NZS 2918:2001. An INSPECTION is required PRIOR to lighting the fire.

Compliance schedule

A compliance schedule is not required for the building.

Attachments

Copies of the following documents are attached to this building consent:

Signature

admin

Position

On behalf of: Waimakariri District Council

Date: 19/05/05

PRIME BUILDING COMPLIANCE
The one-stop building compliance company

REFERRAL FORM

PA-021
Version 6
Date: 09/12/02
Page: 1 of 2

Client N°:	TA:	PIM if previously issued N°:
200510335	050626	

INFORMATION TO COME & COMMENTS	CONSENT TYPE	
	PIM ONLY	
	FAST TRACK - P&D only	
	FAST TRACK - Nil return	
	MINOR WORKS with PIM	
N° of Inspections: 1	MAJOR WORKS with PIM	

	PROCESS REQUIRED	Initial & Date When Complete
	VETTING WITH CLIENT	
	PRE PROCESSING Site Inspection	
	LOG IN / ADMIN. PROCEDURES	
	B1 - PROCESS	17-5-05 BM Wade
	PDI – PROCESS	
	EHO – PROCESS	
	FIRE REVIEW	
	STRUCTURAL REVIEW	
	LOG FIRE	
	PEER REVIEW/ Other	
	Other	
	VALIDATION	17-5-05 BM Wade
	ISSUE	

STANDARD CONDITIONS: 00, 01, 02, 05, 08, 12 31, 33, 34

PRODUCER STATEMENTS:

SPECIAL CONDITIONS:

PIM Requirements

PIM Requirements

REFERRAL FORM - PROCESSING CHECKLIST

NZS 3604:1999		SECTION	
3	SITE REQUIREMENTS	3 -1	☐
4	DURABILITY	4- 1	☐
5	BRACING DESIGN	5 -1	☐
6	FOUNDATION AND SUBFLOOR FRAMING	6 -1	☐
7	FLOORS	7 -1	☐
8	WALLS	8 -1	☐
9	POSTS	9 -1	☐
10	ROOF FRAMING	10 -1	☐
11	THE BUILDING ENVELOPE – WALL AND ROOF CLADDINGS	11 -1	☐
12	INTERIOR LININGS	12 -1	☐
13	CEILINGS	13 -1	☐

New Zealand Building Code Handbook and Approved Documents

No.	Title	OK	No.	Title	OK
B1	Structure	☐	F8	Signs	☐
B2	Durability	☐	G1	Personal Hygiene	☐
C1	Outbreak of fire	☐	G2	Laundering	☐
C2	Means of escape	☐	G3	Food preparation & prevention of contamination	☐
C3	Spread of fire	☐	G4	Ventilation	☐
C4	Structural stability during fire	☐	G5	Interior environment	☐
D1	Access routes	☐	G6	Airborne and impact sound	☐
D2	Mechanical installations for access	☐	G7	Natural light	☐
E1	Surface water	☐	G8	Artificial light	☐
E2	External moisture	☐	G9	Electricity	☐
E3	Internal moisture	☐	G10	Piped services	☐
F1	Hazardous agents on site	☐	G11	Gas as an energy source	☐
F2	Hazardous building materials	☐	G12	Water supplies	☐
F3	Hazardous substances etc.	☐	G13	Foul water	☐
F4	Safety from falling	☐	G14	Industrial liquid waste	☐
F5	Construction and demolition hazards	☐	G15	Solid waste	☐
F6	Lighting for emergency	☐	H1	Energy efficiency	☐
F7	Warning systems	☐			

CHECKLIST SIGNOFF: _____ DATE: _____

200510335

WAIMAKARIRI DISTRICT COUNCIL

Application No: BC050626

APPLICATION FOR A BUILDING CONSENT FOR A SOLID/LIQUID FUEL HEATER

Section 40, Building Act 2004 (Please attach all relevant documents in duplicate)

1. OWNER

Name: A P & L G Chamberlain	
Postal Address: 1 The Stables, Woodend	
Phone N°: 03312708 Fax N°: 3127177	

2. AGENT (Owner's Representative)

Contact Name:	
Postal Address:	
Phone N°:	Fax N°:

3. PROJECT LOCATION

Street Address: 1 The Stables Woodend Nth Canterbury

4. LEGAL DESCRIPTION

Valuation N°: 21613 - 05401		**OFFICE USE ONLY** **Property ID:**
Lot(s): 1 (Section) ~~The Stables~~	DP/S: (Block) 82878	Lot Area(s): 921 Square Metres ☑ Hectares ☐

5. PROJECT

Solid/~~Liquid Heater~~ (Please attach *installation instructions)*	Make: Masport	Solid Fuel ☑ Gas/Liquid Fuel ☐
	Model: LE 3000	Wetback ☐ Dryback ☑
Clean Air Certification No:	04004	Freestanding ☑ Inbuilt ☐
Installer's Name:	N/A ~~if not~~ applicant	Replacement ☐ New ☑
Address:		
Plumber's Name:	N/A *if wetback*	2nd Hand Unit ☐
Address:		*(Engineers Report enclosed?)* ☐

Signature: A Chamberlain L Chamberlain Date: 4 · 5 · 05

Owner / ~~Agent~~ (please delete one)

DETAILS TO ACCOMPANY THIS APPLICATION

1. Two copies of the installation instructions prepared by the heater manufacturer.
2. A floor plan of the building showing the proposed sitting of the heater (see over).
3. Detailed installation instructions for flue system.

RECEIVED 09 MAY 2005

BUILDING CONSENT FEES - The Fee $340.00 (inbuilt fire) or $245.00. (freestanding) GST incl. is payable at the time of application

Waimakariri District Council, Private Bag 1005, Rangiora; Telephone (03) 313 6136 - Fax (03) 313 4432
Prime Building Compliance Ltd Telephone (03) 3118240 – Fax (03) 3131645 0800 724 2378

FOR COUNCIL USE

Date Received: _____ Receipt No: _____

Receiving Officer: _____

Fees which are payable at time of application are: $340.00 inbuilt - $245.00. Freestanding

The fees are to be paid directly to our Agent – PRIME BUILDING COMPLIANCE (if paying by cheque please make it out to Prime Building Compliance).

The information contained in this application may be made available to other units of the Council

Please use the space below to illustrate the location of the heater.

Notes: 1. Draw a floor plan sufficient to show accurately the location of the heater within the building.
2. Detail the location of adjacent walls, windows and doors.
3 Show the location of the existing water cylinder if a wetback/hot water booster is to be fitted.

Waimakariri District Council
APPROVED
Signed: ... 17.5.05

200510335

reduced by 25mm if a polished stainless steel flue shield is fitted instead of an enamelled one.
be reduced by 50mm if a polished stainless steel flue shield is fitted instead of an enamelled one.
y be reduced by 125mm if a polished stainless steel flue shield is fitted instead of an enamelled one.
alid only when the room walls are at 90° to each other.

‡ Note: Clearances are for fire hazard only. For durability of finishes or surfaces you should contact the relevant manufacturer for their specification. MASPORT accepts no responsibility for the deterioration of surfaces or finishes.

See INSTALLING THE FLUE for recommended Australian flue systems.

FLOOR PROTECTOR (Hearth) REQUIREMENTS — Free - standing models

Unless your woodfire will be standing on an un-covered fireproof floor (containing no combustible material) extending at least 500mm from the appliance, it will be necessary to provide a floor protector (hearth). See page 7 for construction details. Where the minimum size requirements bring the side of the floor protector nearly to a wall, it is advisable to extend the protector to meet the wall.

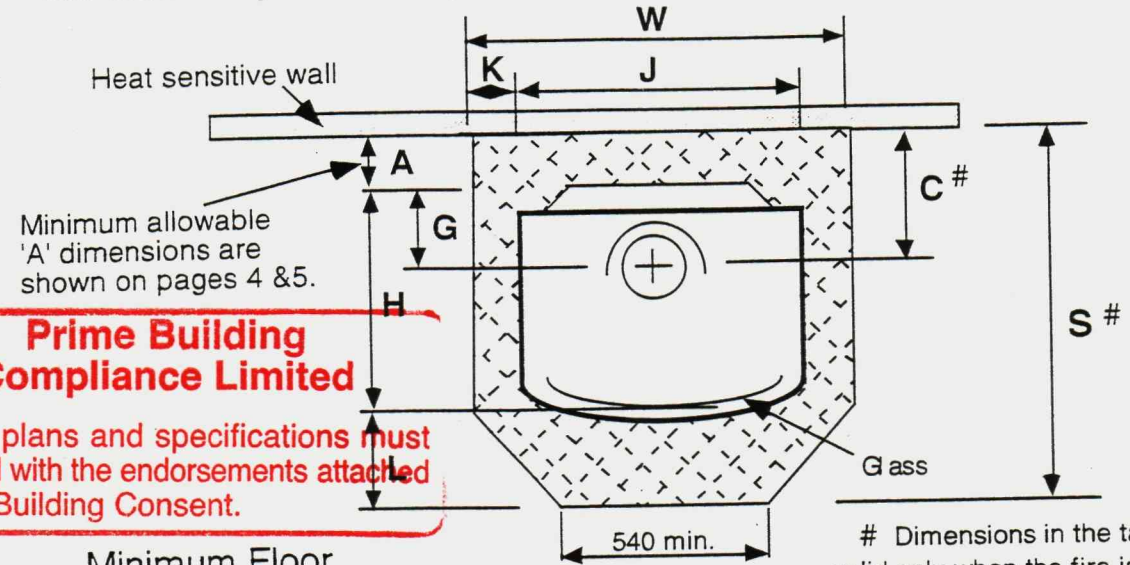

Prime Building Compliance Limited
These plans and specifications must be read with the endorsements attached to the Building Consent.

Minimum Floor Protector Dimensions

Dimensions in the table are valid only when the fire is exactly at its minimum allowable wall clearance

NEW ZEALAND (With flue shield)	A #	C	G	H	J	K	L	W	S #	Ash Floor Protr. ø	Insultg. Floor Protr. ø
Horizon, LE 2000	50Δ	220	170	435	555	160	300	875	785	Yes	Yes
Siena	100	270	170	490	555	160	300	875	890	Yes	Yes
LE 3000	50Δ	275	225	490	660	138	420¥	935	960¥	No	Yes
LE 3000 with shelf acc.	50Δ	275	225	490	660	138	300	935	840	Yes	Yes
LE 5000	50Δ	275	225	490	660	138	300	935	840	Yes	Yes
Verona	125	345	220	560	660	140	300	940	985	Yes	Yes
Toronto	125	320	195	540	660	153	300	965	965	Yes	Yes
Grandview	200	395	195	610	760	103	520¥	965	1330¥	No	Yes

¥ Increase by 80 mm if the floor protector top is not at least 50 mm above the floor.
ø See page 7 for minimum constructional requirements.
Valid only when the fire is exactly at its minimum allowable wall clearance.

Δ NOTE: Where a fan is being fitted, you may be prefer to increase the 50 'A' dimension to 100 mm to provide easier access for servicing. If this 50 mm is added to 'A', it must also be added to the 'C' and 'S' dimensions shown.

200510335

AUSTRALIA	A #	C#	G	H	J	K	L	W	S #
Horizon (with flue shield)	150*	320*	170	435	555	160	300	875	885*
LE 2000 (with flue shield)	125	295	170	435	555	160	300	875	860
Siena (with flue shield)	150◊	320◊	170	490	555	160	300	875	940◊
Siena (without flue shield)	360	530	170	490	555	160	300	875	1150
LE 3000 & LE 5000 (with fl. shld)	150*	375*	225	490	660	138	350	935	990*
Verona (with flue shield)	250†	470†	220	560	660	140	300	940	1110†
Toronto (with flue shield)	125	320	195	540	660	153	300	965	965
Grandview (with flue shield)	150	345	195	610	760	103	300	965	1060

* Reduce by 25mm for a polished stainless steel heat shield instead of an enamelled one.

◊ Reduce by 50mm for a polished stainless steel heat shield instead of an enamelled one.

÷ Reduce by 125mm for a polished stainless steel heat shield instead of an enamelled one.

CORNER FLOOR PROTECTORS (Hearths)

While the information in the previous section details the MINIMUM size of floor protector necessary to comply with the Safety Standards, it may often be desirable to use a somewhat larger size for aesthetic reasons. A particular example is when the woodfire is installed diagonally in a corner. It will be more practical to carry the protector right into the corner and shape it as shown. The chart facilitates calculation of the MINIMUM dimensions required for floor protectors of this shape. Minimum allowable values for dimension 'E' are given in the tables on page 4.

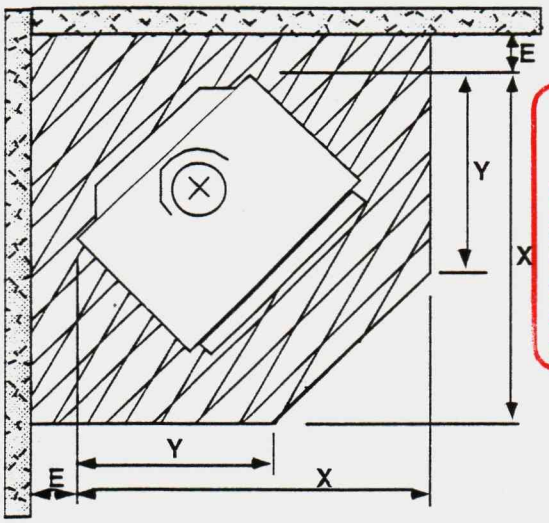

Corner Floor Protector Arrangement

Prime Building Compliance Limited

HEATING UNIT and FLUE to be installed in strict accordance with the manufacturers instructions. UNIT and HEARTH shall be restrained in accordance with the Buiilding Code, clause B1 and AS/NZS 2918:2001. An INSPECTION is required PRIOR to lighting the fire.

MINIMUM DIMENSIONS — mm See pages 6, 8 for construction.		AUSTRALIA		NEW ZEALAND	
		X	Y	X	Y
Horizon, LE 2000	With Shelf	880	560	880	565
	Without Shelf	880	560	—	—
Siena		880	600	880	600
LE 3000		980	605	1035	650†
LE 5000	With Shelf	980	605	950	570
	Without Shelf	980	605	—	—
Verona		970	655	970	655
Toronto	With Shelf	—	—	1015	640
	Without Shelf	1025	625	—	—
Grandview		1100	725	1250	890†

Your measurement **'E'** must be added to **'X'** and **'Y'** to find the appropriate minimum overall floor protector dimensions. See page 4 for minimum values of **'E'.**

† Increase **'Y'** by 120mm if the floor protector top is not at least 50mm above the floor.

200510335

POSITIONING YOUR FREE-STANDING WOODFIRE

Free-standing woodfires must not be installed in a fireplace or alcove, or under a ceiling of less than 2.3m height. No wall or other fixed object may be closer to the front of the woodfire than one metre.

If a water heating accessory is to be fitted, a positioning restraint is the need to be close to your hot water storage cylinder (See page 9).

Determine the installation position for your woodfire only after considering the necessary clearances (See Tables below) and checking the practicability of installing the flue system. Heat resistant walls covered with heat sensitive surface treatments (e.g. wallpaper or heat sensitive paints) should be regarded as heat sensitive walls. The flue shielding and the 25mm clearance gap around it above the ceiling will occupy a diameter of 300mm (Grandview and Toronto 325mm), and this space must be available without the removal of structural beams. Flue installations other than strictly vertical ones are possible. See AS/NZS 2918 for information on non-vertical flues and flues passing through walls and eaves.

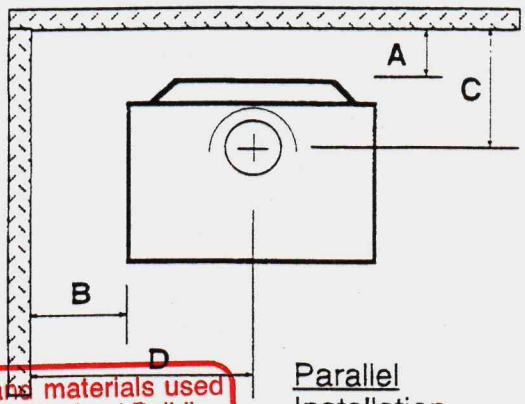

Parallel Installation

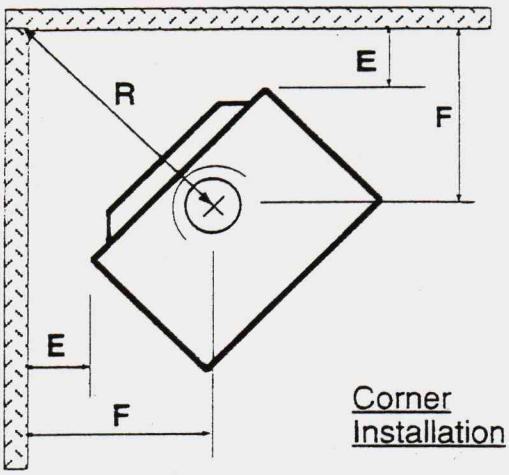

Corner Installation

All construction work and materials used shall comply with the New Zealand Building Code, nothwithstanding any inconsistencies which may occur in the drawings and specifications.

NEW ZEALAND — MINIMUM DISTANCES TO HEAT SENSITIVE WALLS (mm) ‡
WHEN A POLISHED S.S. FLUE HEAT SHIELD WITH A TOP DISPERSAL CAP IS FITTED

Model	Flue Heat Shield	A	B	C	D	E	F	R§
Horizon, LE2000	YES - 1200 mm	50Δ	300	220	578	50	355	500
Siena	YES - 1200mm	100	250	270	528	50	355	500
LE 3000	YES - 1200 mm	50Δ	245	275	575	25	380	540
LE 5000	YES - 1200 mm	50Δ	245	275	575	25	380	540
Verona	YES - 1200 mm	125	300	345	630	125	480	680
Toronto	YES - 900mm	125	400	320	730	50	425	600
Grandview	YES - 900 mm	200	350	395	730	50	458	650

Δ See note under minimum New Zealand floor protector dimension table (page 5).

AUSTRALIA

MINIMUM DISTANCES TO HEAT SENSITIVE WALLS (mm) ‡ WITH THE APPROPRIATE FLUE HEAT SHIELD							
Model	A	B	C	D	E	F	R §
Horizon	150*	350	320*	628	100	405	575
LE 2000	125	325	295	603	100	405	575
Siena (with flue shield)	150◊	250	320◊	528	100	405	575
Siena (without flue shield)	360	250	530	528	230	535	760
LE 3000	150*	325	375*	655	125	480	680
LE 5000	150*	325	375*	655	125	480	680
Verona	250†	300	470†	630	125	480	680
Toronto	125	350	320	680	100	475	675
Grandview	150	350	345	730	100	508	720

‡, §, *, ◊, † — See next page.

200510335

HeatSaver
FLUE SYSTEM

INSTALLATION INSTRUCTIONS

- This HeatSaver flue system is tested and certified to AS/NZS 2918 Appendix F, which means it is approved for use on all solid fuel appliances with a flue diameter of 150mm.
- Installation of any solid fuel appliance should only be carried out by suitably trained and qualified personnel.
- Position the stove to the desired position, always ensuring that the manufacturer's minimum clearances to combustibles are complied with.
- Check that there are no roofline ridges or valleys in the way, or if they cannot be avoided, that the installer knows how to weatherproof the penetration, and reinstate the full strength of the structure.
- At the ceiling level, construct a square frame of 300mm x 300mm internal dimensions and cut away the ceiling materials from the inside of this frame.
- Lower the 300mm flue pipe casing into this frame and nail in place when the bottom edge is 25mm below the ceiling level and the 8 nail holes provided are touching the timber frame. Ensure that the spacer brackets are at the top of the casing as shown in the diagram.
- Check all 4 locating brackets are securely in place and drop 250mm diameter lower casing in place. This will naturally settle so it protrudes 25mm below the ceiling.
- Make roof penetration, assemble and fit required flue length and install with upper casing. Secure all joins with at least 3 stainless steel rivets or self tapping screws.
- Frame and brace upper installation as required and flash the roof to shield penetration.
- Fit ceiling plate to ceiling.
- When trimming the stainless steel flue length, remember to allow for expansion when flue is hot.
- Fix HeatSaver cowl in place. Fixings are not required as the cowl clips into place.

HeatSaver

150mm Ø FLUE-SYSTEM
(No Ceiling Cavity)

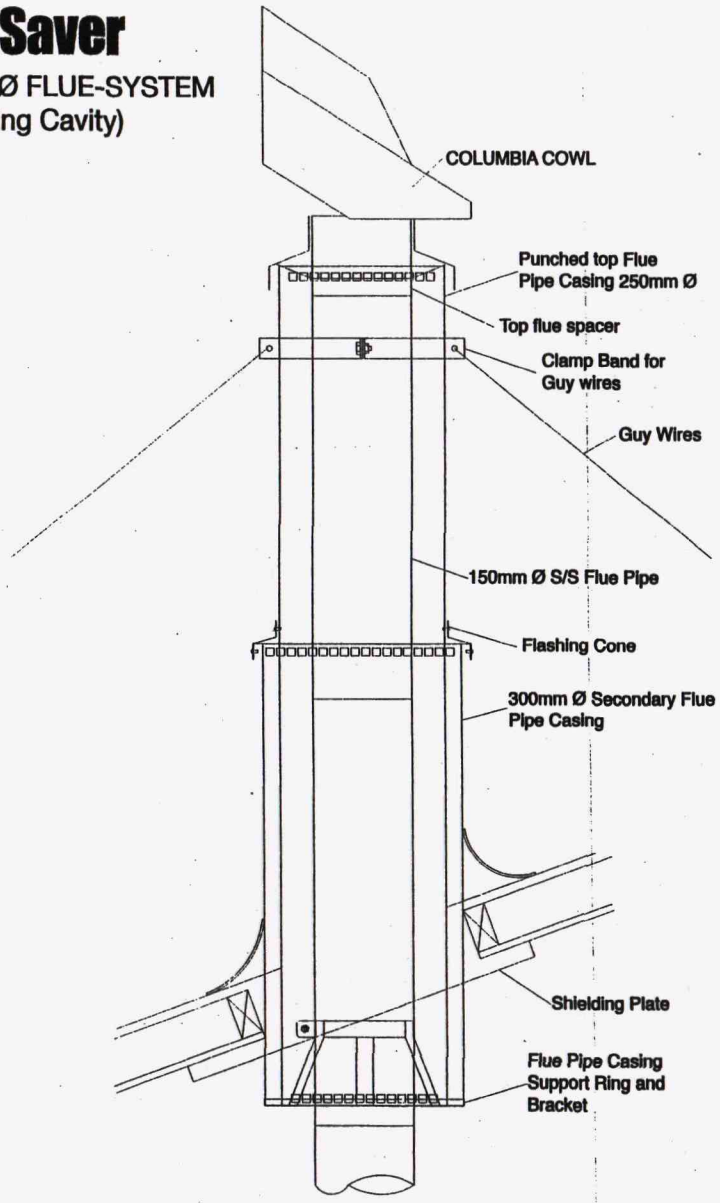

HeatSaver
FLUE SYSTEM

HeatSaver

150mm Ø FLUE-SYSTEM

